

MALL
CONSULTING
PARTNER



DENSO
DENSO WAVE

DENSO

DENSO WAVE

MOBILE COMPUTER

BHT-M60

SERIES



Scanning-Excellence at its Core

Combines scanning-excellence with perfect handling:

The BHT-M60 Mobile Computer.



The BHT-M60 Android device is the result of conintuous perfectionism!

Its handle is designed to fit smoothly into the user's hands, making it feel like it becomes their natural extension.

Combined with the most powerful DENSO original scan engine to date, this Android device delivers an experience that will make you ask for nothing less ever again.

EXCELLENT OVERVIEW:

With the 3.2″ screen everything that matters is in sight.

POWERFUL:

Octa-Core 2.2 GHz (Qualcomm SMD 660) for efficient processes without interruptions.

TOUGH:

Display with crack-resistent Asahi Dragontrail™ Pro glass fitted as a standard - one of the best in the industry.

ERGONOMIC:

The ergonomically shaped handle fits perfectly into the user's hands.

UP-TO-DATE:

Running Android™ 10 with the option to upgrade to Android™ 11 or higher at a later point.

Focussing on the user's needs: The application areas.

The BHT-M60 demonstrates its capabilities especially where data has to be collected and processed in bulk. Its ergonomic concept, optimum view of the display and easy-to-use functions are perfect for speeding up reading processes.

Its great robustness makes the BHT-M60 ideal for countless indoor and outdoor applications.

These are just a few examples of its wide range of applications.

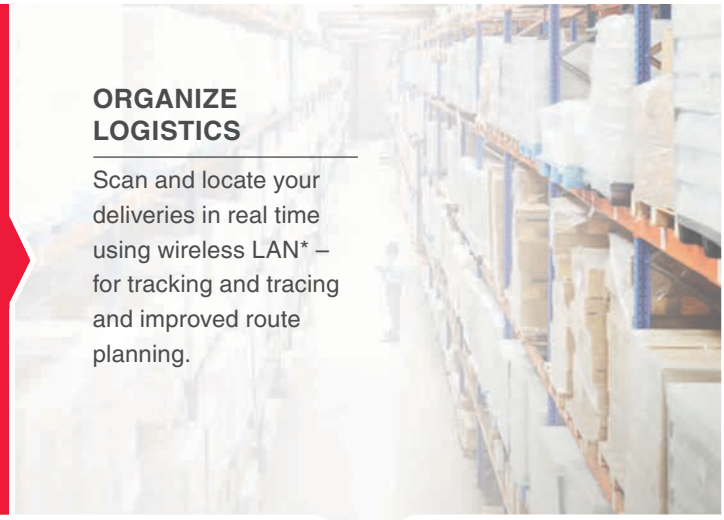

ORGANIZE LOGISTICS

Scan and locate your deliveries in real time using wireless LAN* – for tracking and tracing and improved route planning.



OPTIMISE FIELD SERVICE

Record the process status and progress immediately on site and communicate with head office whenever you need to – via wireless LAN*.



PROFESSIONALISE RETAIL

Whether it's for warehousing, ordering or sales management, collect data with precision – even if codes are damaged.

* depending on model

The result of continuous perfectionism:
The technical highlights.

Wherever better performance is demanded, technology has to progress.
The BHT-M60 makes advanced automatic ID technology the standard.

Reads even difficult labels



Thanks to a new decode engine and a high resolution sensor, the BHT-M80 is able to read even the most difficult labels.

Superior scanning range



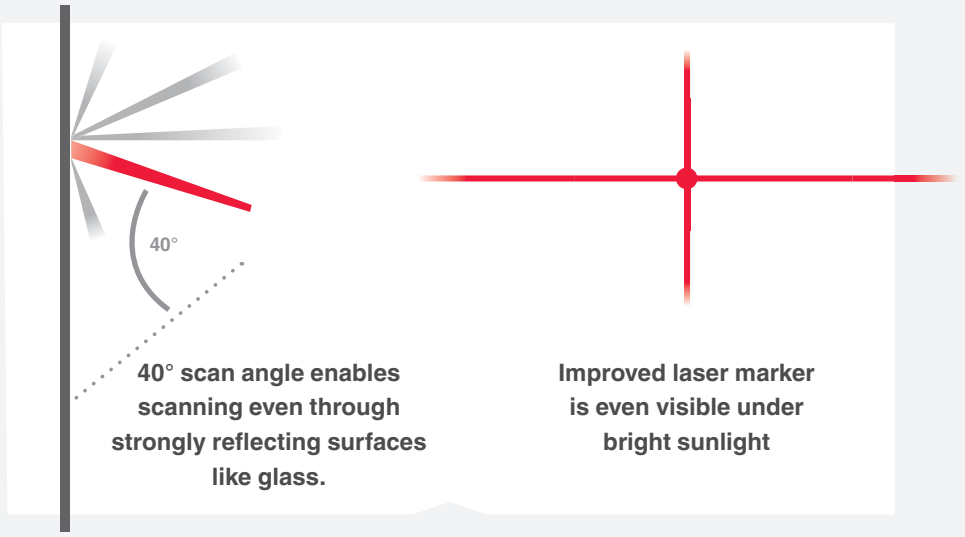

40° scan angle enables scanning even through strongly reflecting surfaces like glass.

Improved laser marker is even visible under bright sunlight

Tested to the extreme.
It wouldn't be DENSO otherwise.

Innovation simply for the sake of innovating is not what DENSO's about. The BHT-M60 has passed our rigorous quality tests for robustness and durability, **even in the harshest conditions.**

3 YEAR

warranty

Battery life

perfect for long working hours.

Works at extreme temperatures from **-20° to +50° Celsius.**

3.00 metres

Survived umpteen fall tests

from heights of up to 3.0 m.

IP67-certified

protection against water and dust.

SCANS QUICKLY AND EFFORTLESSLY THANKS TO ADVANCED TECHNOLOGY FROM DENSO.

It is no secret anymore that mobile data capture devices are a much faster option for processes like goods receipts or stock takings than the pen and paper method. The BHT-M60 accelerates those processes even more: thanks to a new decode engine combined with a high performance CPU, which leads to two times faster scannings than with conventional readers.

Superior reading speed.
Stress-less, continuous scanning.

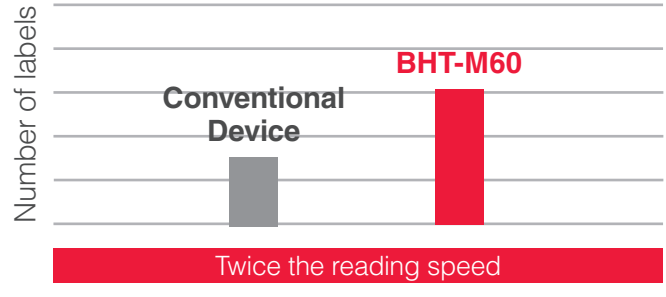

SPECIFICATIONS

Model			BHT-M60-QWG	BHT-M60-QW
OS			Android™ 10	
CPU			Qualcomm® SDM660 64 bit 2.20 GHz (Octa-Core)	
Memory	RAM		4 GB	
	Flash ROM		64 GB	
Display	Screen size & resolution *1		3.2 inch WVGA (480×800)	
	Display device		Dot matrix liquid crystal display (colour)	
	Backlight		White LED	
Reader	Reading method		Image sensor	
	Supported code	2D code	QR Code, Micro QR Code, SQRC, PDF417, Micro PDF417, Maxi Code, Data Matrix (ECC200), and GS1 Composite	
		Barcode	EAN-13/8 (JAN-13/8), UPC-A/E, UPC/EAN (with add-on), Interleaved 2 of 5, Codabar (NW-7), CODE39, CODE93, CODE128, GS1-128 (EAN-128), Standard 2 of 5 (STF), and GS1 DataBar(RSS)	
		OCR	Supported *2	
	Minimum resolution	2D code	0.127 mm	
		Barcode	0.076 mm	
	Marker		Cross guide marker	
	Reading confirmation		Blue LED, speaker, and vibration	
Keys	Number of keys		27 keys (including the power key), cursor keys, and 3 trigger keys	
Touch Panel			Asahi Dragontrail™ Pro *3 - wet touch / gloved fingertip /stylus	
Commu-nication	Wireless LAN connection	Standard	Compliant with IEEE802.11a/b/g/n/ac and MU-MIMO 2x2	
		Frequency	5 GHz-band (W52, W53, and W56), 2.4 GHz-band (1 to 13 channels)	
		Security	Encryption: WEP (40/128), TKIP, and AES WPA authentication: WPA and WPA2 User authentication: PSK, EAP-TLS, and PEAP	
	WWAN		Supported: W-CDMA/LTE and VoLTE FDD-LTE (4G) - Bands 1, 3, 5, 7, 8, 19, 20, 26, 28 TDD-LTE (4G) - Bands 38, 39, 40, 41 W-CDMA/UMTS/HSPA/HSPA+ (3G) - Bands 1, 5, 6, 8, 19	-
	GPS		A-GPS/GLONASS/QZSS/BeiDou/ Galileo	-
	Bluetooth®		Bluetooth® Ver5.1+EDR/LE Supported Profile: RFCOMM/A2DP/AVCTP/ACDTP/GVDP/AVRCP/DUN/DI/ HFP/HID/HSP/IOP/MAP/OPP/BNEP/PAN/PBAP/SAP/SPP	
	USB		USB2.0 (Type-C)	
	NFC *4		ISO/IEC14443 Type A/B, Felica, ISO/IEC 15693(RFID)	
Camera			Rear 13MP autofocus	
Card slot			microSD (SDHC and SDXC (up to128 GB)) SDHC Speed class 4 supported nanoSIM × 1	
Microphone receiver			Attached *5	
Speaker			90dB or more at 10 cm away (at 2.8kHz)	
Sensor			G-sensor, gyro sensor, proximity sensor, light intensity sensor and geomagnetic sensor	
Power supply	Main battery		Lithium-ion battery	
	Wireless charging		Not supported	
	USB charging		Compliant with Qualcomm® Quick Charge™ 3.0	
	Operating time		Approx. 24 hours *9	
Environ-mental require-ments	Operating temperature *6		-20°C to 50°C	
	Operating humidity		20 to 80%RH (non-condensing and non-icing)	
	Protection rating *7		IP65 / IP67	
	Drop resistance		60 or more drops from 1.5 m, 3.0 m	
Weight (incl. battery)			Approx. 320g (including battery)	

*1. The LCD display is manufactured with precise technology.The rate of non-defective pixels is 99.99% or more, which means that 0.01% or less pixels could be stuck or dead.
*2. License required.
*3. Dragontrail® Pro is a registered trademark of AGC Inc.
*4. Before using the NFC function, perform test reading sufficiently using the target NFC card.
*5. A headset or headphone can be connected through the USB Type-C cable. A USB Type-C-to-audio jack (3.5 mm) conversion cable is optional.
*6. 0°C to 40°C during charging.
*7. These are the values tested at a room temperature, and not guaranteed values.
*8. The operating time is a reference value at a room temperature and may differ depending on the operating conditions.
*9. This is a result of measurement based on the JEITA HT Standard Operation Mode G, and may change depending on the operating environment and system settings.

SOFTWARE

- SDK
- Scan Settings
- BHT Browser
- BHT Link
- BHT Setting
- BHT DMS
- Battery Monitor
- WLAN Manager
- BHT Remote
- Application Launcher
- BHT Security Package

DIMENSIONS

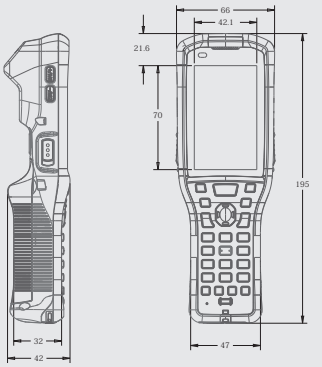

ACCESSORIES (sold separately)

Communication / Charger

- USB type charger CU-M60U
- USB type charger CU-M60UQ (QC3.0)
- Charger CU-M60L
- 4 slot unit charger CH-M60-4
- 4 slot battery charger CH-BT2-4
- AC adapter
- AC adapter (QC3.0)

Batteries

- BT2 (3200 mAh)

Others

- Waist case, stylus pen
- USB Type-C conversion cable (1.5m)
- USB Type-C audio jack conversion cable (1.5m)

DENSO

DENSO WAVE EUROPE GmbH
Parsevalstr. 9 A
D-40468 Düsseldorf
+49 211 540 138 40
info@denso-wave.eu

For more information, please visit our website.
www.denso-wave.eu

TO USE THIS PRODUCT SAFELY Before using this product, read its User´s Manual thoroughly.

QR Code is a registered trademark of DENSO WAVE INCORPORATED.
Product appearance and specifications are subject to change without notice. | © 2020 DENSO WAVE EUROPE GmbH

2020 - 12 - V1.0